enCoRe III Full Speed USB Laser Mouse Release Notes

Purpose

Although standard mice and keyboards in existence today are suitable for most users, some applications demand higher performance. In particular, gaming mice strive for higher accuracy and lower latency than can be achieved with an LED-based sensor and low-speed USB controller.

This mouse design couples a high resolution laser navigation sensor with the performance of the enCoRe III full-speed USB controller. It has been bench tested and should serve as a suitable starting point for creating a production quality product with minimal engineering effort. This design has not gone through rigorous QA testing for release as a formal Cypress reference design.

Design information

This design is a full-speed USB Laser Mouse that is built upon the Cypress CY7C64125 enCoRe IIII device and the Avago (formerly Agilent) ADNS-6010 laser sensor. We provide the following design materials:

- enCoRe III firmware source code
- Schematic DSN Files
- Schematic PDF Files
- Release Notes (this document)

Hardware

The hardware design is simple. enCoRe III and the ADNS-6010 exchange data through a standard Serial Peripheral Interface. Five mouse buttons are directly connected to the enCoRe III microcontroller I/O pins. A mechanical Z wheel is also managed directly by the enCoRe III.

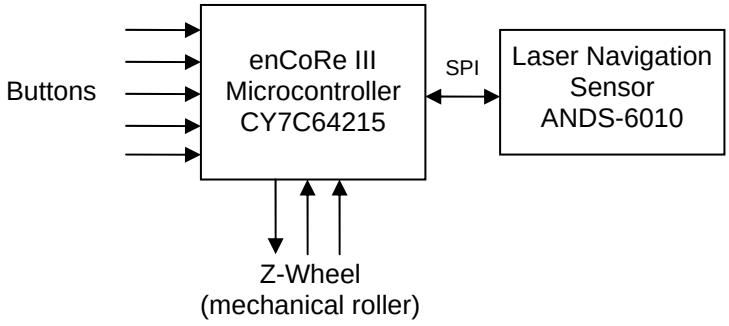

Firmware

The firmware is built under PSoC Designer version 4.3. Complete project files are provided

Key modules

Following are some of the key firmware modules and their function

mouse.c

This routine performs all of the main functions, such as handling reports from the sensor, buttons and scroll wheel, as well as managing power.

optical.c:

This module handles sensor configuration and data exchange with the sensor over SPI

spi.c
This module manages the SPI configuration.
timer.asm
This module provides a microsecond level delay timer
wheel.c
This module handles the Z-wheel interface

Timer

The timer is a critical function for this design. In enCoRe III the PWM User Module provides the timing resource. The PWM interrupt is used to generate a 1ms time base. This is accomplished by configuring the PWM for 32KHz operation and using 32 cycles for the interrupt. 1/32(KHz) x 32 (Period) = 1(ms).
Button debounce, USB report polling and suspend mode detection are all calculated from the 1ms base.

GPIO interrupts

The main function for GPIO interrupts in this design is to wake up the device and the system from suspend mode.

Sensor SROM data

The ADNS-6010 provides X-Y motion data. This sensor uses an externally loaded program to control its operation and allow for upgrade of sensor functionality. The external program is supplied by Avago and can be downloaded from their website. The data is stored within the enCoRe III's flash program code and is downloaded to the sensor at boot time, thus no external EEPROM is required.

Laser Power adjustment

The ADNS-6010 sensor provides a laser power adjustment capability. The current firmware does not implement this capability. Manufacturers will have to perform testing with their specific design to ensure compliance with eye safety requirements. Resistor R_{bin} must be chosen appropriately and laser diode configuration registers set in accordance with the guidance in the ADNS-6010 datasheet.

USB Report Descriptor

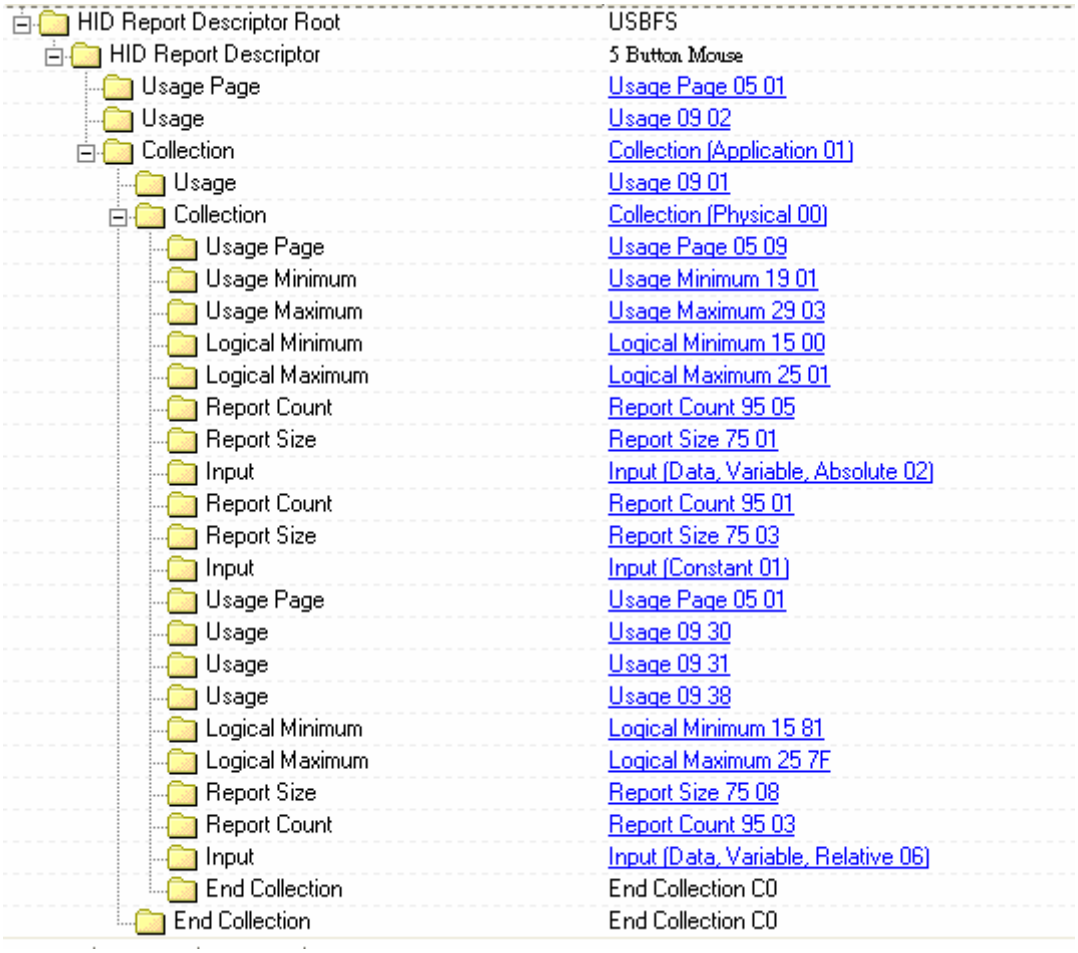

HID Report Descriptor Root	USBFS
HID Report Descriptor	5 Button Mouse
Usage Page	Usage Page 05 01
Usage	Usage 09 02
Collection	Collection (Application 01)
Usage	Usage 09 01
Collection	Collection (Physical 00)
Usage Page	Usage Page 05 09
Usage Minimum	Usage Minimum 19 01
Usage Maximum	Usage Maximum 29 03
Logical Minimum	Logical Minimum 15 00
Logical Maximum	Logical Maximum 25 01
Report Count	Report Count 95 05
Report Size	Report Size 75 01
Input	Input (Data, Variable, Absolute 02)
Report Count	Report Count 95 01
Report Size	Report Size 75 03
Input	Input (Constant 01)
Usage Page	Usage Page 05 01
Usage	Usage 09 30
Usage	Usage 09 31
Usage	Usage 09 38
Logical Minimum	Logical Minimum 15 81
Logical Maximum	Logical Maximum 25 7F
Report Size	Report Size 75 08
Report Count	Report Count 95 03
Input	Input (Data, Variable, Relative 06)
End Collection	End Collection C0
End Collection	End Collection C0

Button Report

```
23.1    IN      01 00 00 00                 ....                29968.1.0
23.1    IN      00 00 00 00                 ....                29969.1.0
23.1    IN      02 00 00 00                 ....                29970.1.0
23.1    IN      00 00 00 00                 ....                29971.1.0
23.1    IN      04 00 00 00                 ....                29972.1.0
23.1    IN      00 00 00 00                 ....                29973.1.0
23.1    IN      08 00 00 00                 ....                29974.1.0
23.1    IN      00 00 00 00                 ....                29975.1.0
```

XY Report

```
23.1   IN      00 ff 00 00              ....              29976.1.0
23.1   IN      00 02 01 00              ....              29977.1.0
23.1   IN      00 01 00 00              ....              29978.1.0
23.1   IN      00 ff 00 00              ....              29979.1.0
23.1   IN      00 02 03 00              ....              29980.1.0
23.1   IN      00 00 01 00              ....              29981.1.0(2)
23.1   IN      00 01 01 00              ....              29983.1.0
23.1   IN      00 00 04 00              ....              29984.1.0
23.1   IN      00 01 03 00              ....              29985.1.0(2)
23.1   IN      00 00 fe 00              ....              29987.1.0
23.1   IN      00 00 07 00              ....              29988.1.0
23.1   IN      00 fe 07 00              ....              29989.1.0
23.1   IN      00 ff 06 00              ....              29990.1.0
23.1   IN      00 ff 00 00              ....              29991.1.0
23.1   IN      00 00 01 00              ....              29992.1.0
23.1   IN      00 ff fe 00              ....              29993.1.0
23.1   IN      00 00 ff 00              ....              29994.1.0
```

Wheel Report

```
23.1   IN      00 01 00 00              ....              30112.1.0(3)
23.1   IN      00 00 01 00              ....              30115.1.0
23.1   IN      00 00 00 01              ....              30116.1.0(3)
```